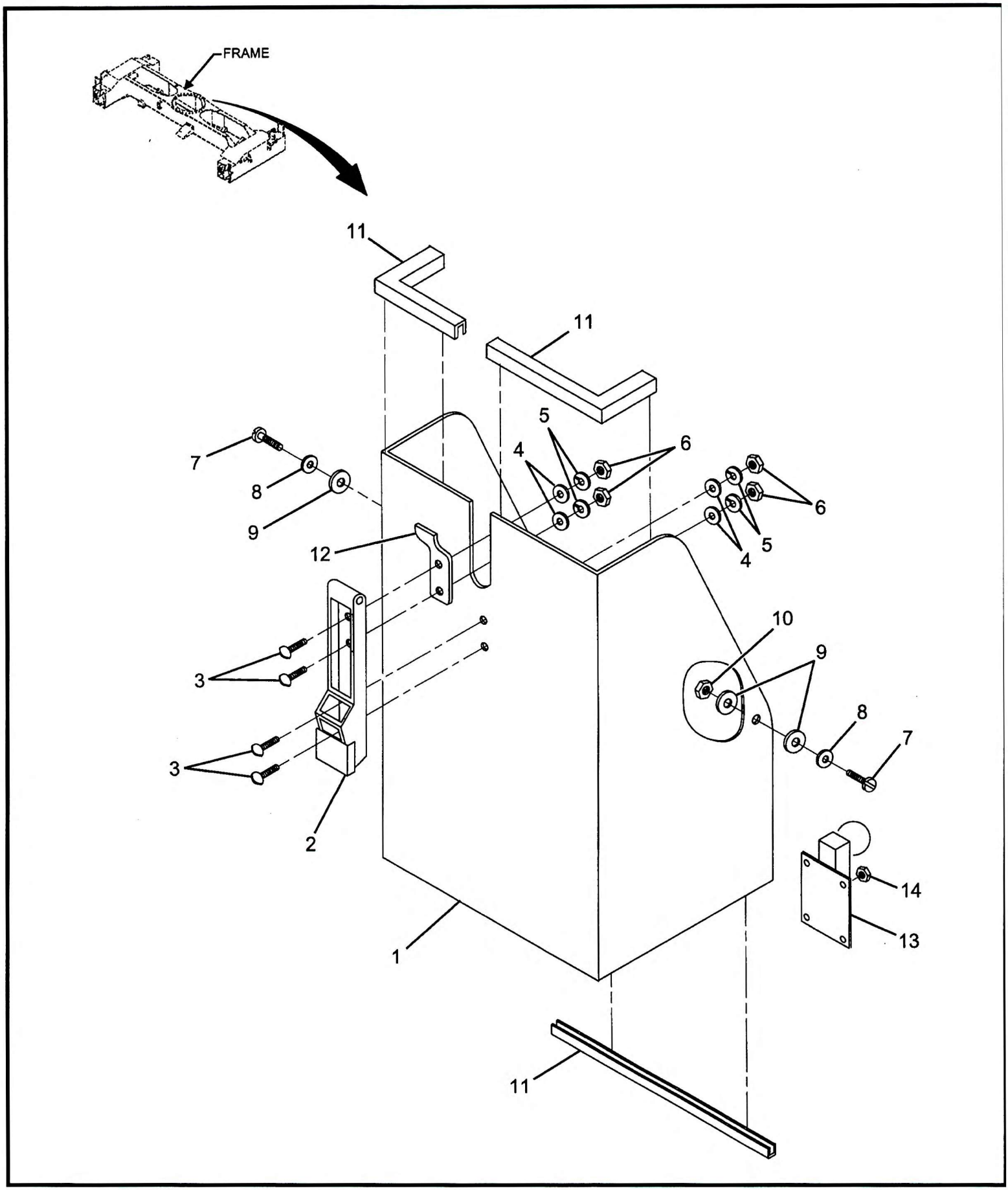

2165810000

(SHEET 1 OF 1)